223 REMINGTON

Justin Schrader

Like many popular cartridges in existence, the 223 Remington began life as an experimental military cartridge in 1957. Extensively tested in Armalite's prototype of the AR-15, the 223 Remington was officially accepted by the United States Army with a velocity of 3,250 feet per second and a chamber pressure of 52,000 pounds per square inch. In 1962, Remington submitted the 223 Remington to the Sporting Arms and Ammunition Manufacturer's Institute for approval.

Since that time the 223 Remington has experienced great success and is quite possibly the most popular centerfire rifle cartridge in the world. New shooters love the 223 for its low recoil, economical price and availability. Handloaders love the 223 for the ease of finding components and the wide selection of bullets available. Loaded with lighter bullets like the 40 grain Ballistic Tip, the 223 Remington is absolute death on prairie dogs and ground squirrels. One of my favorite loads for taking whitetails at close range is the 60 grain Partition loaded over 24.2 grains of Varget.

For years BALL™ or spherical powders such as Winchester 748 or Hodgdon H335 were the primary choices for loading the 223 Remington. Today, modern propellants such as Benchmark offer excellent metering and temperature stability and are the choice of varmint hunters and match shooters alike.

The last ten years we have seen a trend towards heavier, longer bullets with higher ballistic coefficients tailored to long range shooting. Early firearms were made with 1:12" twist barrels to stabilize the 55 grain bullets that were standard back then. Today many manufacturers offer the 223 Remington with twists as fast as 1:7" to stabilize heavier bullets. Verify that you are using a fast enough twist rate to adequately stabilize your bullet of choice.

A quick note on 223 Remington vs the 5.56x45mm NATO: the 5.56 came along several years after the 223 Remington, and while the exterior cartridge dimensions are essentially identical, the chambers and throats are not. The 5.56x45mm NATO is loaded to a higher pressure level and must never be fired in guns labeled 223 Remington. However, 223 Remington rounds can be safely fired in firearms marked 5.56x45mm NATO.

As the Ballistician at Hodgdon Powder Company, Justin Schrader oversees the Ballistics Lab, Quality Control, and the development of new products.

223 REMINGTON

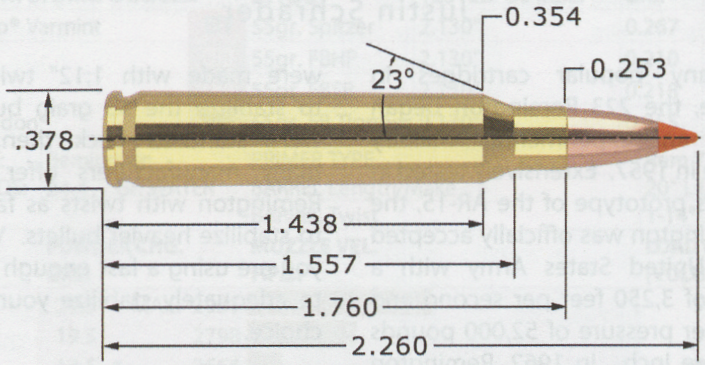

Maximum S.A.A.M.I. Overall Cartridge Length: 2.260"

BULLET CHOICES FOR THE 223 REMINGTON

AccuBond®
AB
Grain
70

Ballistic Tip® Varmint
BTV
Grain
40
50
55
60

BT® Lead-Free
BTLF
Grain
35
40
50

Ballistic Silvertip®
BST
Grain
50
55

Varmageddon®
VMG
Grain
40
50
53
55

Varmageddon® HP
VMG
Grain
62

Partition®
PT
Grain
60

RDF®
RDF
Grain
70
77
85

Custom Competition®
CC
Grain
52
69
77
cann 77
80

Expansion Tip®
ET
Grain
55

Nosler® C&D HP
C&D
Grain
34
50
55

Nosler® C&D
C&D
Grain
50
55

TECHNICAL INFORMATION

Simply a commercialized version of the 5.56x45mm NATO cartridge, the 223 Remington is without a doubt the single most popular centerfire varmint round in the civilized world. The loads listed here were developed using standard commercial brass. Military brass can have less case capacity because of heavier construction, and often yields higher pressures. We recommend caution when using military brass for the 223, and suggest starting at or below the minimum loads listed. Additionally, if the brass you are using had crimped primers, the crimp MUST be removed prior to re-priming. If you are loading for a semi-auto and find that crimping the bullet is necessary, we recommend using a taper crimp since there is no crimping groove on any of our .22 caliber products. Crimping with a standard seating die (roll crimping) can adversely affect accuracy. The standard 223 Remington barrel twist rate is 1-12". This twist rate will not properly stabilize bullets longer than our 60-grain Partition®.

In certain cases, load densities will exceed 100%. This is what is called a "compressed load", and is no cause for concern. All powder charges have air space around and between the granules, which can be compressed to a certain extent when the bullet is seated.

223 Rem - 34/35 grain — 22 Cal. (.224")

MAXIMUM SAAMI O.A.C.L.		2.260"	TESTED O.A.C.L.	B.C.	S.D.
Nosler®	C&D	34gr. FBHP	2.080"	0.113	0.097
Ballistic Tip® Lead-Free	BTLF	35gr. Spitzer	2.260"	0.201	0.100

CASE TYPE:	Nosler	PRIMER TYPE	Rem 7 1/2
CASE HOLDS:	28.2 Gr. WATER	BARREL Length/Make	24" Lilja
		BARREL Twist	1-12"

POWDER TYPE	POWDER CHG. GRS.		MUZZLE VEL. F.P.S.	LOAD DENSITY (VOLUME)
AA 5744	21.5	MAX.	3576	88%
	20.5		3452	84%
	19.5	*	3328	79%
RL7	23.5	MAX.	3738	91%
	22.5		3622	87%
	21.5	*	3505	83%
H322	26.0	MAX.	3803	100%
	25.0		3737	96%
	24.0	*	3672	92%
TAC	28.5	MAX.	3829 **	103%
Most Accurate	27.5	*	3773	99%
Powder Tested	26.5		3717	95%
IMR 4198	22.5	* MAX.	3848	93%
	21.5		3689	88%
	20.5		3530	84%
N133	25.5	MAX.	3849 **	105%
	24.5	*	3656 **	101%
	23.5		3463	97%
H335	27.5	MAX.	3850	99%
	26.5	*	3751	95%
	25.5		3651	92%
X-Terminator	28.0	MAX.	3887 **	102%
	27.0	*	3803	98%
	26.0		3720	95%
RL10x	25.0	MAX.	3892	100%
	24.0	*	3710	96%
	23.0		3528	92%
AA 2230	28.5	MAX.	3920 **	103%
	27.5		3847	100%
	26.5	*	3775	96%

BC=Ballistic Coefficient SD=Sectional Density
*Most Accurate Load Tested **Compressed Load

Use Maximum Loads with Caution
Refer to page 79 for additional safety information

223 Rem - 40 grain — 22 Cal. (.224")

MAXIMUM SAAMI O.A.C.L.		2.260"	TESTED O.A.C.L.	B.C.	S.D.
Ballistic Tip® Lead-Free	BTLF	40gr. Spitzer	2.260"	0.220	0.114
Ballistic Tip® Varmint	BTV	40gr. Spitzer	2.260"	0.221	0.114
Varmageddon®	VMG	40gr. FB Tipped	2.225"	0.211	0.114

CASE TYPE:	Nosler	PRIMER TYPE	Rem 7 1/2
CASE HOLDS:	29.2 Gr. WATER	BARREL Length/Make	24" Lilja
		BARREL Twist	1-12"

POWDER TYPE	POWDER CHG. GRS.		MUZZLE VEL. F.P.S.	LOAD DENSITY (VOLUME)
Varget	27.0	MAX.	3383	100%
	26.0		3247	96%
	25.0	*	3111	93%
W748	28.0	* MAX.	3547	100%
Most Accurate	27.0		3426	96%
Powder Tested	26.0		3304	93%
H322	25.0	MAX.	3570	93%
	24.0		3437	89%
	23.0	*	3304	85%
RL7	23.5	* MAX.	3614	87%
	22.5		3492	84%
	21.5		3370	80%
PP Varmint	29.0	MAX.	3642	100%
	28.0		3476	97%
	27.0	*	3311	93%
H335	27.5	* MAX.	3681	96%
	26.5		3544	92%
	25.5		3406	89%
IMR 4198	23.0	MAX.	3682	91%
	22.0		3492	87%
	21.0	*	3302	83%
AA 2015	25.5	MAX.	3796	99%
	24.5		3627	95%
	23.5	*	3458	91%
N120	23.5	MAX.	3810	98%
	22.5		3677	94%
	21.5	*	3543	90%
Benchmark	28.0	* MAX.	3867 **	104%
	27.0		3738	100%
	26.0		3609	96%

BC=Ballistic Coefficient SD=Sectional Density
*Most Accurate Load Tested **Compressed Load

Use Maximum Loads with Caution
Refer to page 79 for additional safety information

223 Rem - 50/52/53 grain — 22 Cal. (.224")

MAXIMUM SAAMI O.A.C.L.		2.260"	TESTED O.A.C.L.	B.C.	S.D.
Ballistic Tip® Lead-Free	BTLF	50gr. Spitzer	2.260"	0.251	0.142
Ballistic Tip® Varmint	BTV	50gr. Spitzer	2.260"	0.238	0.142
Nosler®	C&D	50gr. FBHP	2.200"	0.192	0.142
Nosler®	C&D	50gr. FBSP	2.230"	0.195	0.142
Varmageddon®	VMG	50gr. FB Tipped	2.260"	0.227	0.142
Custom Competition®	CC	52gr. HPBT	2.260"	0.220	0.148
Varmageddon®	VMG	53gr. FB Tipped	2.260"	0.303	0.152

CASE TYPE:	Nosler	PRIMER TYPE	Rem 7 1/2
CASE HOLDS:	27.5 Gr. WATER	BARREL Length/Make	24" Lilja
		BARREL Twist	1-12"

POWDER TYPE	POWDER CHG. GRS.		MUZZLE VEL. F.P.S.		LOAD DENSITY (VOLUME)
Varget	26.0	* MAX.	3220	**	102%
	25.0		3092		98%
	24.0		2963		94%
IMR 4198	22.0	* MAX.	3230		93%
	21.0		3110		89%
	20.0		2990		84%
W748	26.5	* MAX.	3260		100%
	25.5		3150		97%
	24.5		3040		93%
H335	26.0	MAX.	3260		96%
	25.0		3170		92%
	24.0	*	3080		89%
PP Varmint	27.0	MAX.	3262		99%
	26.0		3119		96%
	25.0	*.	2977		92%
CFE 223	29.0	MAX.	3379	**	105%
	28.0		3233	**	102%
	27.0	*	3088		98%
TAC	27.0	MAX.	3379		100%
	26.0		3267		96%
	25.0	*	3156		92%
N133	25.0	MAX.	3412	**	106%
	24.0		3301	**	101%
	23.0	*	3190		97%
AA 2460	28.0	MAX.	3497	**	103%
	27.0		3391		99%
	26.0	*	3285		96%
Benchmark	26.5	MAX.	3540	**	104%
Most Accurate	25.5	*	3412		100%
Powder Tested	24.5		3285		96%

BC=Ballistic Coefficient SD=Sectional Density
*Most Accurate Load Tested **Compressed Load

Use Maximum Loads with Caution
Refer to page 79 for additional safety information

223 Rem - 55 grain — 22 Cal. (.224")

MAXIMUM SAAMI O.A.C.L.		2.260"	TESTED O.A.C.L.	B.C.	S.D.
Ballistic Tip® Varmint	BTV	55gr. Spitzer	2.260"	0.267	0.157
Expansion Tip®	ET	55gr. Spitzer	2.250"	0.305	0.157
Due to internal construction differences, always begin with starting loads when using Expansion Tip® products. 55 grain E-Tip® requires a minimum 1-10" twist rate to reliably stabilize.					
Nosler®	C&D	55gr. FBHP	2.260"	0.210	0.157
Nosler®	C&D	55gr. FBSP	2.260"	0.218	0.157
Varmageddon®	VMG	55gr. FB Tipped	2.260"	0.255	0.157

CASE TYPE:	Nosler	PRIMER TYPE	Rem 7 1/2
CASE HOLDS:	27.4 Gr. WATER	BARREL Length/Make	24" Lilja
		BARREL Twist	1-12"

POWDER TYPE	POWDER CHG. GRS.		MUZZLE VEL. F.P.S.	LOAD DENSITY (VOLUME)
Varget	25.0	MAX.	3037	99%
	24.0		2921	95%
	23.0	*	2805	91%
H335	25.0	* MAX.	3140	93%
Most Accurate	24.0		3030	89%
Powder Tested	23.0		2920	85%
PP Varmint	26.0	* MAX.	3140	96%
	25.0		3018	92%
	24.0		2897	88%
W748	26.0	MAX.	3140	99%
	25.0		3060	95%
	24.0	*	2980	91%
N120	21.0	* MAX.	3149	93%
	20.0		3020	89%
	19.0		2892	85%
IMR 4895	25.5	* MAX.	3178 **	101%
	24.5		3083	97%
	23.5		2988	93%
N135	25.0	MAX.	3195 **	106%
	24.0		3091 **	102%
	23.0	*	2987	98%
TAC	26.0	MAX.	3243	96%
	25.0		3082	93%
	24.0	*	2920	89%
CFE 223	28.0	* MAX.	3292 **	102%
	27.0		3155	99%
	26.0		3018	95%
Benchmark	25.0	* MAX.	3308	99%
	24.0		3182	95%
	23.0		3056	91%

BC=Ballistic Coefficient SD=Sectional Density
*Most Accurate Load Tested **Compressed Load

Use Maximum Loads with Caution
Refer to page 79 for additional safety information

223 Rem - 60/62 grain — 22 Cal. (.224")

MAXIMUM SAAMI O.A.C.L.		2.260"	TESTED O.A.C.L.	B.C.	S.D.
Ballistic Tip® Varmint	BTV	60gr. Spitzer	2.260"	0.270	0.171
Partition®	PT	60gr. Spitzer	2.260"	0.228	0.171
Varmageddon®	VMG	62gr. FBHP	2.180"	0.251	0.176

CASE TYPE:	Nosler	PRIMER TYPE	Rem 7 1/2
CASE HOLDS:	27.6 Gr. WATER	BARREL Length/Make	26" Pac-Nor
		BARREL Twist	1-7"

POWDER TYPE	POWDER CHG. GRS.		MUZZLE VEL. F.P.S.	LOAD DENSITY (VOLUME)
Varget	24.5	MAX.	2990	96%
	23.5	*	2877	92%
	22.5		2764	88%
AA 2460	23.0	* MAX.	3017	84%
	22.0		2906	81%
	21.0		2794	77%
RL15	25.5	* MAX.	3063	96%
	24.5		2929	92%
	23.5		2794	89%
TAC	24.5	MAX.	3070	90%
	23.5	*	2965	86%
	22.5		2861	83%
H322	23.5	* MAX.	3070	92%
	22.5		2966	88%
	21.5		2863	84%
H335	25.0	* MAX.	3105	92%
	24.0		3008	88%
	23.0		2912	85%
IMR 4895	25.5	* MAX.	3126	101%
	24.5		2990	97%
	23.5		2855	93%
H4895	25.5	* MAX.	3134 **	102%
	24.5		3050	98%
	23.5		2965	94%
Benchmark	23.5	MAX.	3141	92%
Most Accurate	22.5	*	3039	88%
Powder Tested	21.5		2937	84%
CFE 223	27.0	* MAX.	3152	98%
	26.0		3037	94%
	25.0		2922	91%

BC=Ballistic Coefficient SD=Sectional Density
*Most Accurate Load Tested **Compressed Load

Use Maximum Loads with Caution
Refer to page 79 for additional safety information

223 Rem - 64 grain — 22 Cal. (.224")

MAXIMUM SAAMI O.A.C.L.	2.260"	TESTED O.A.C.L.	B.C.	S.D.
Bonded Solid Base® BSB	64gr. PPT	2.175"	0.231	0.182

CASE TYPE:	Nosler	PRIMER TYPE	WMSR #41
CASE HOLDS:	27.0 Gr. WATER	BARREL Length/Make	24" H-S Prec.
		BARREL Twist	1-12"

POWDER TYPE	POWDER CHG. GRS.		MUZZLE VEL. F.P.S.	LOAD DENSITY (VOLUME)
IMR 4895	25.0	* MAX.	2894	101%
	24.0		2771	97%
	23.0		2648	93%
Varget	25.0	* MAX.	2899	100%
	24.0		2779	96%
	23.0		2658	92%
Benchmark	23.0	* MAX.	2907	92%
	22.0		2837	88%
	21.0		2768	84%
H322	22.5	MAX.	2919	90%
	21.5	*	2823	86%
	20.5		2727	82%
CFE 223 Most Accurate Powder Tested	26.0	* MAX.	2933	96%
	25.0		2783	93%
	24.0		2634	89%
RL15	25.0	* MAX.	2933	96%
	24.0		2789	93%
	23.0		2646	89%
H335	24.5	MAX.	2945	92%
	23.5	*	2834	88%
	22.5		2723	85%
TAC	24.5	* MAX.	2981	92%
	23.5		2885	88%
	22.5		2789	85%
AA 2460	23.5	MAX.	2989	88%
	22.5		2871	84%
	21.5	*	2752	80%
H4895	24.0	MAX.	2993	98%
	23.0		2858	94%
	22.0	*	2724	90%

BC=Ballistic Coefficient SD=Sectional Density
*Most Accurate Load Tested **Compressed Load

Use Maximum Loads with Caution
Refer to page 79 for additional safety information

223 Rem - 69/70 grain — 22 Cal. (.224")

MAXIMUM SAAMI O.A.C.L.		2.260"	TESTED O.A.C.L.	B.C.	S.D.
Custom Competition®	CC	69gr. HPBT	2.260"	0.305	0.196
AccuBond®	AB	70gr. Spitzer	2.260"	0.370	0.199
Reduced Drag Factor™	RDF	70gr. HPBT	2.260"	0.416	0.199

CASE TYPE:	Nosler	PRIMER TYPE	WSR
CASE HOLDS:	27.5 Gr. WATER	BARREL Length/Make	20" Pac-Nor
		BARREL Twist	1-7'

POWDER TYPE	POWDER CHG. GRS.		MUZZLE VEL. F.P.S.	LOAD DENSITY (VOLUME)
RL15	24.5	MAX.	2786	93%
	23.5	*	2641	89%
	22.5		2495	85%
N540	25.5	MAX.	2807	** 103%
	24.5		2639	99%
	23.5	*	2470	95%
IMR 4895	23.5	MAX.	2809	93%
	22.5	*	2666	89%
	21.5		2522	85%
H4895	24.0	MAX.	2810	96%
	23.0		2669	92%
	22.0	*	2528	88%
TAC	24.5	MAX.	2826	90%
	23.5		2686	87%
	22.5	*	2546	83%
Varget	25.0	MAX.	2845	98%
	24.0		2729	94%
	23.0	*	2613	90%
N135	23.5	MAX.	2854	99%
	22.5		2731	95%
	21.5	*	2607	91%
H335	24.0	MAX.	2862	89%
	23.0		2738	85%
	22.0	*	2614	81%
AA 2230	23.5	* MAX.	2866	87%
Most Accurate	22.5		2791	83%
Powder Tested	21.5		2716	80%
W748	26.0	MAX.	2957	98%
	25.0		2840	95%
	24.0	*	2723	91%

BC=Ballistic Coefficient SD=Sectional Density
*Most Accurate Load Tested **Compressed Load

Use Maximum Loads with Caution
Refer to page 79 for additional safety information

223 Rem - 77/80 grain — 22 Cal. (.224")

MAXIMUM SAAMI O.A.C.L.		2.260"	TESTED O.A.C.L.	B.C.	S.D.
Custom Competition®	CC	77gr. HPBT	2.260"	0.340	0.219
Reduced Drag Factor™	RDF	77gr. HPBT	2.260"	0.454	0.219
Custom Competition®	CC	80gr. HPBT	2.260"	0.415	0.228

CASE TYPE:	Nosler	PRIMER TYPE	WSR
CASE HOLDS:	26.5 Gr. WATER	BARREL Length/Make	20" Pac-Nor
		BARREL Twist	1-7"

POWDER TYPE	POWDER CHG. GRS.		MUZZLE VEL. F.P.S.	LOAD DENSITY (VOLUME)
AA 2015	21.0	MAX.	2554	90%
	20.0	*	2449	86%
	19.0		2344	81%
H335	23.0	MAX.	2592	88%
	22.0	*	2479	84%
	21.0		2367	80%
N540	24.5	MAX.	2600 **	103%
	23.5	*	2474	99%
	22.5		2348	94%
W748	24.0	MAX.	2604	94%
	23.0	*	2494	90%
	22.0		2385	86%
N140	23.5	MAX.	2635 **	103%
	22.5	*	2529	99%
	21.5		2423	94%
Varget	24.0	MAX.	2655	98%
	23.0		2553	94%
	22.0	*	2451	90%
TAC	23.5	MAX.	2656	90%
	22.5	*	2534	86%
	21.5		2411	82%
IMR 4064	23.5	MAX.	2667	98%
	22.5	*	2567	94%
	21.5		2466	90%
RL15	24.0	MAX.	2686	94%
Most Accurate	23.0	*	2563	90%
Powder Tested	22.0		2440	86%
H4895	23.5	* MAX.	2697	97%
	22.5		2585	93%
	21.5		2473	89%

BC=Ballistic Coefficient SD=Sectional Density
*Most Accurate Load Tested **Compressed Load

Use Maximum Loads with Caution
Refer to page 79 for additional safety information

223 Rem - 85 grain — 22 Cal. (.224")

MAXIMUM SAAMI O.A.C.L.	2.260"	TESTED O.A.C.L.	B.C.	S.D.
Reduced Drag Factor™ RDF	85gr. HPBT	2.260"	0.498	0.242

CASE TYPE:	Nosler	PRIMER TYPE	WSR
CASE HOLDS:	24.7 Gr. WATER	BARREL Length/Make	24" PAC-NOR
		BARREL Twist	1-7"

POWDER TYPE	POWDER CHG. GRS.		MUZZLE VEL. F.P.S.	LOAD DENSITY (VOLUME)
AA 2015	20.0	MAX.	2384	92%
	19.0		2236	87%
	18.0		2088	83%
H335	22.0	MAX.	2525	90%
	21.0		2395	86%
	20.0		2265	82%
TAC	22.0	MAX.	2541	90%
	21.0		2432	86%
	20.0		2323	82%
W748	23.0	MAX.	2542	97%
	22.0		2392	93%
	21.0		2242	89%
Varget	22.0	MAX.	2571	96%
	21.0		2485	92%
	20.0		2399	88%
N540	23.0	MAX.	2577 **	103%
	22.0		2495	99%
	21.0		2413	94%
IMR 4064	22.5	MAX.	2597	101%
	21.5		2447	96%
	20.5		2297	92%
RL15	23.5	MAX.	2608	99%
	22.5		2472	95%
	21.5		2336	91%
H4895	22.0	MAX.	2622	98%
Most Accurate	21.0		2491	93%
Powder Tested	20.0		2360	89%
CFE 223	24.0	MAX.	2654	97%
	23.0		2527	93%
	22.0		2399	89%

BC=Ballistic Coefficient SD=Sectional Density
*Most Accurate Load Tested **Compressed Load

Use Maximum Loads with Caution
Refer to page 79 for additional safety information